Centre Number	Candidate Number	Name

UNIVERSITY OF CAMBRIDGE INTERNATIONAL EXAMINATIONS
General Certificate of Education Advanced Level

PHYSICS **9702/05**

Paper 5 Practical Test

October/November 2006

1 hour 30 minutes

Candidates answer on the Question Paper.
Additional Materials: As listed in the Confidential Instructions.

READ THESE INSTRUCTIONS FIRST

Write your Centre number, candidate number and name on all the work you hand in.
Write in dark blue or black pen.
You may use a soft pencil for any diagrams, graphs or rough working.
Do not use staples, paper clips, highlighters, glue or correction fluid.

Answer **all** questions.

You are expected to record all your observations as soon as these observations are made, and to plan the presentation of the records so that it is not necessary to make a fair copy of them. The working of the answers is to be handed in.
Marks are mainly given for a clear record of the observations actually made, for their suitability and accuracy, and for the use made of them.
Additional answer paper and graph paper should be submitted only if it becomes necessary to do so.
You are reminded of the need for good English and clear presentation in your answers.

At the end of the examination, fasten all your work securely together.

For Examiner's Use	
1	
2	
Total	

This document consists of **10** printed pages and **2** blank pages.

© UCLES 2006

It is recommended that you spend about 60 minutes on this question

You may not need to use all of the materials provided.

1 In this question you will investigate how the resistance of a light-dependent resistor (LDR) depends on the number of holes made in an aluminium foil placed above the LDR. The LDR is contained in a tube.

(a) (i) A lamp has been mounted above the tube containing the LDR. You should **not** adjust the position of the lamp or the tube during the experiment.

(ii) Connect the LDR in series with a 1 kΩ resistor, milliammeter and a power supply as shown in Fig. 1.1. A voltmeter is to be placed in parallel with the LDR. Connections to the LDR may be made using crocodile clips attached to the wires leading from the tube.

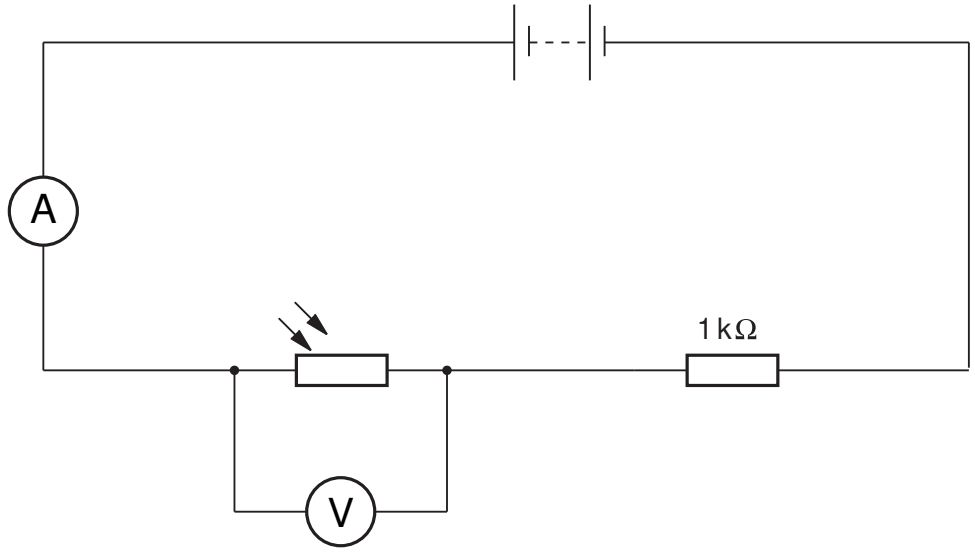

Fig. 1.1

© UCLES 2006

(b) (i) Use the pin to make a small hole near the centre of the aluminium foil as shown in Fig. 1.2. The diameter of the hole should be the same as the diameter of the pin. Remove the pin.

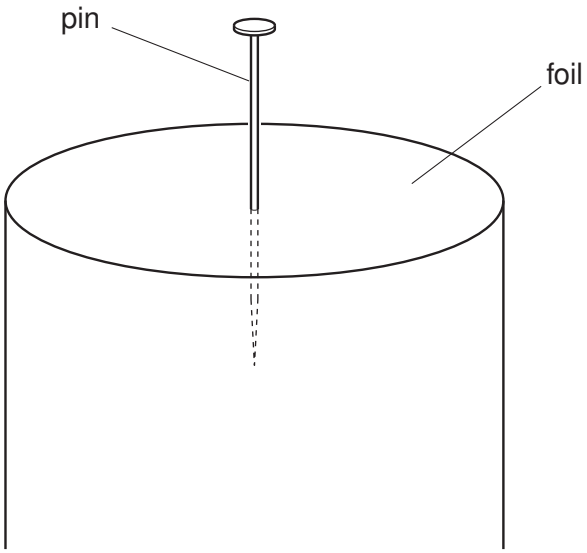

Fig. 1.2

(ii) Record the current I in the circuit and the potential difference V across the LDR.

I = ... mA

V = ... V

(iii) Calculate the resistance R of the LDR.

R = ... Ω

(iv) Justify the number of significant figures that you have given for R.

.....

.....

.....

.....

© UCLES 2006

(c) Make another, separate pinhole close to the centre of the foil. Repeat **(b) (ii)** and **(iii)** until you have six sets of readings for R and the number N of pinholes in the foil where $1 \leq N \leq 6$.

Include values of $\lg(R/\Omega)$ and $\lg N$ in your table of results.

(d) (i) Plot a graph of $\lg(R/\Omega)$ (y-axis) against $\lg N$ (x-axis).

(ii) Draw the line of best fit.

(iii) Determine the gradient and y-intercept of this line.

gradient = ……

y-intercept = ……..

© UCLES 2006

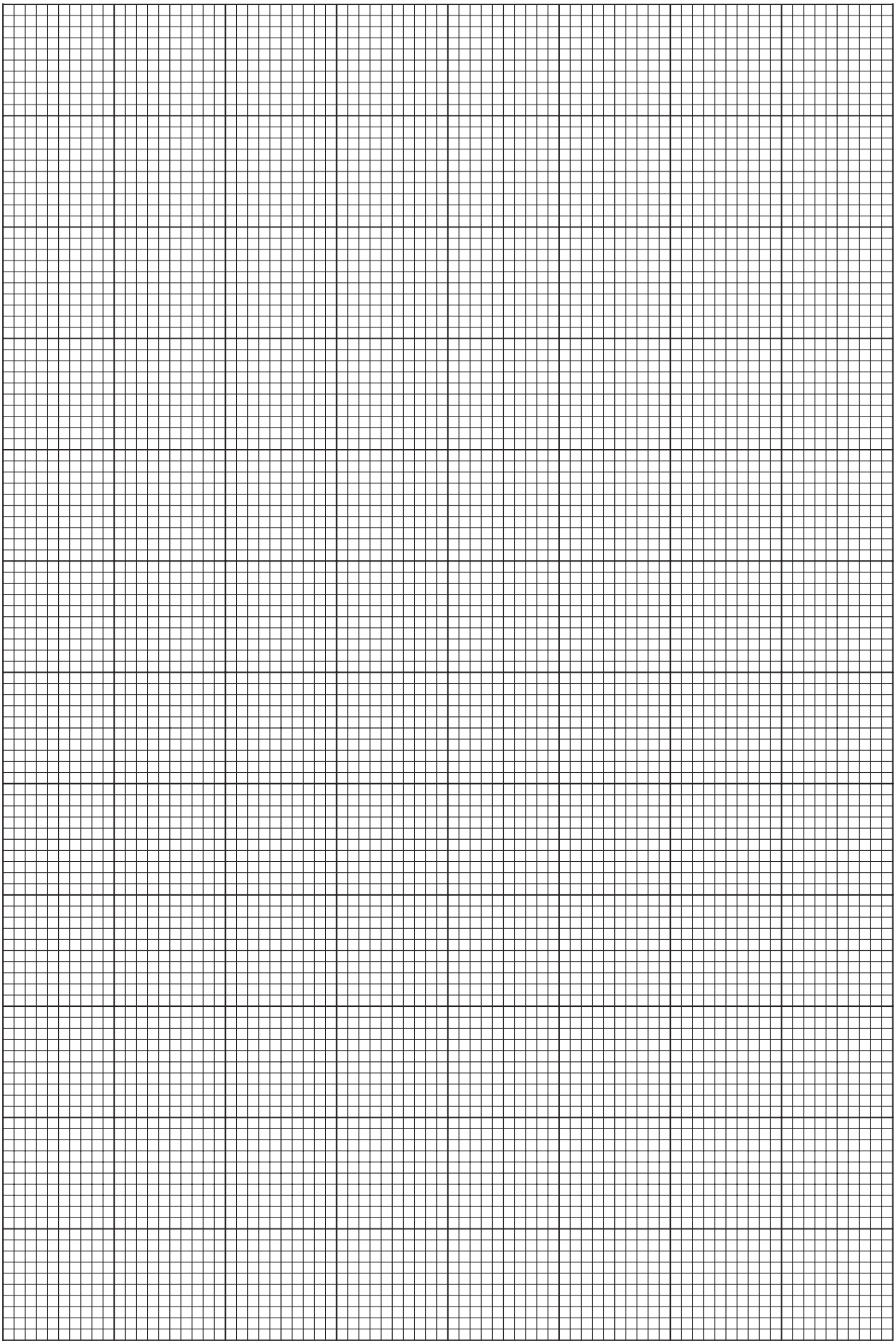

© UCLES 2006

(e) The expression relating R and N is

$$R = aN^b$$

where a and b are constants.

Use your answers from **(d) (iii)** to determine values for a and b. You need not be concerned with the units of these quantities.

a = ...

b = ...

(f) (i) Use a micrometer screw gauge to measure the diameter of the pin.

diameter of pin = ... mm

(ii) Hence determine the cross-sectional area A_p of one pinhole.

A_p = ... mm^2

(iii) Use the rule to measure the diameter of the tube containing the LDR, and hence determine the cross-sectional area A_T of the tube.

A_T = ... mm^2

© UCLES 2006

(iv) Use your values from **(ii)** and **(iii)** to find the number of holes equivalent to the cross-sectional area of the tube.

number of holes = ...

(g) Use your answers from **(e)** and **(f)** to determine a value for the resistance of the LDR if the foil were to be removed from the end of the tube. It is **not** necessary to check this value experimentally.

R = ... Ω

© UCLES 2006

It is recommended that you spend about 30 minutes on this question.

2 A simple air-spaced capacitor can be made by placing two metal plates close to each other. When the capacitor is charged the plates have equal and opposite charges as shown in Fig. 2.1.

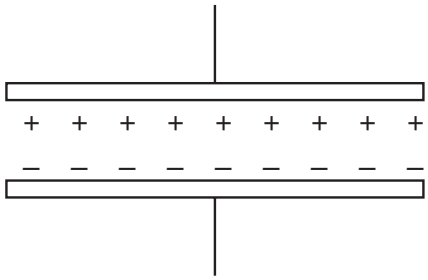

Fig. 2.1

The plates attract each other because they have opposite charges. This force of attraction can be small and therefore difficult to measure.

Design a laboratory experiment to investigate how the force of attraction between the plates depends on the potential difference between the plates. You should draw a detailed labelled diagram showing the arrangement of your equipment. In your account you should pay particular attention to

(a) the procedure to be followed,

(b) how the plates would be charged,

(c) how the potential difference between the plates would be measured,

(d) how the equipment would be arranged so that the force between the plates is made as large as possible,

(e) how the force of attraction between the plates would be measured,

(f) any safety precautions that you would take.

© UCLES 2006

Diagram

.....

.....

.....

.....

.....

.....

.....

.....

.....

.....

.....

.....

.....

.....

.....

© UCLES 2006

© UCLES 2006

BLANK PAGE

BLANK PAGE

Permission to reproduce items where third-party owned material protected by copyright is included has been sought and cleared where possible. Every reasonable effort has been made by the publisher (UCLES) to trace copyright holders, but if any items requiring clearance have unwittingly been included, the publisher will be pleased to make amends at the earliest possible opportunity.

University of Cambridge International Examinations is part of the University of Cambridge Local Examinations Syndicate (UCLES), which is itself a department of the University of Cambridge.